PROPELLER SHAFT

CONTENTS

GENERAL INFORMATION 2
SERVICE SPECIFICATIONS 2
LUBRICANT 2
SPECIAL TOOL 2
PROPELLER SHAFT 3

GENERAL INFORMATION

A two-joint propeller shaft was used for both the front and rear.

SERVICE SPECIFICATIONS

Items		Standard value	Limit
Propeller shaft runout mm	Front	–	0.5
	Rear	–	0.4
Length of rear propeller shaft mm		630 ± 1.5* <3-door models>, 645.5 ± 1.5 <3-door models>, 803 ± 1.5 <5-door models>	–
Clearance of snap ring groove mm	Front	0 – 0.06	–
	Rear	0.02 – 0.06	–

NOTE: * indicates vehicles for Hong Kong.

LUBRICANT

Items	Specified lubricant	Quantity
Front propeller shaft sleeve yoke	Hypoid gear oil SAE 75W–90 or 75W–85W or 80W conforming to API GL–4	As required

SPECIAL TOOL

Tool	Number	Name	Use
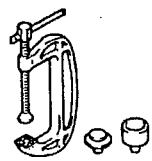 B990840	MB990840	Universal joint remover and installer	Disassembly and reassembly of the universal joint

PROPELLER SHAFT

REMOVAL AND INSTALLATION

Caution
Do not reuse the rear propeller shaft already shrunk due to a big impact. The rear propeller shaft has impact-absorption mechanism (shrinkage).

Pre-removal Operation
- Shift the lever to "2H"
- Transfer Gear Oil Draining
  (M/T: Refer to GROUP 22 - On-vehicle Service.)
  (A/T: Refer to GROUP 23 - On-vehicle Service.)

Post-installation Operation
Transfer Gear Oil Supplying
(M/T: Refer to GROUP 22 - On-vehicle Service.)
(A/T: Refer to GROUP 23 - On-vehicle Service.)

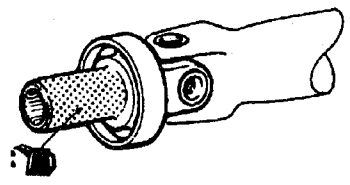

10G0001

Gear Oil: Hypoid gear oil SAE 75W-90 or 75W-85W or 80W conforming to API GL-4

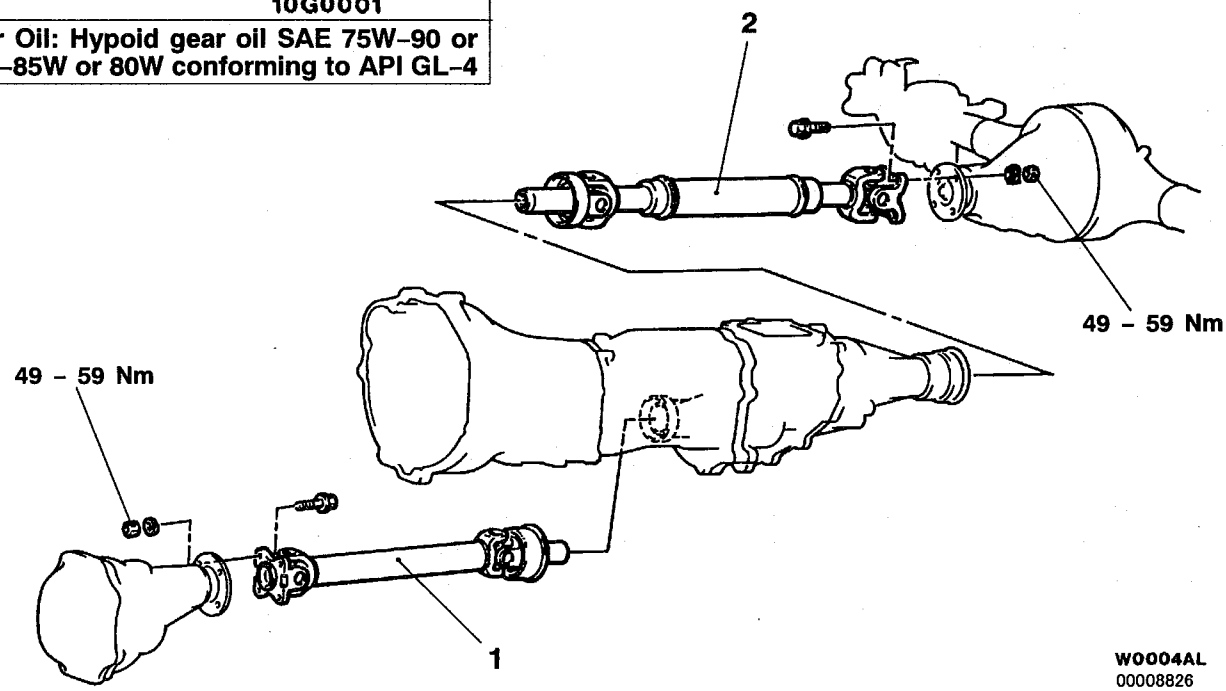

Removal steps

◀A▶ ▶A◀ 1. Front propeller shaft assembly
◀A▶ ▶A◀ 2. Rear propeller shaft assembly

REMOVAL SERVICE POINT

◀A▶ FRONT PROPELLER SHAFT ASSEMBLY/REAR PROPELLER SHAFT ASSEMBLY REMOVAL

1. Make mating marks on the differential companion flange and flange yoke, and then remove the propeller shaft assembly.
2. Cover the transmission and transfer not to allow foreign materials to enter.

INSTALLATION SERVICE POINT

▶A◀ REAR PROPELLER SHAFT ASSEMBLY/FRONT PROPELLER SHAFT ASSEMBLY INSTALLATION

When reusing the propeller shaft, align the mating marks made during the removal and install the propeller shaft assembly to the companion flange.

Caution

1. Wipe out oil and grease on the threads of the mounting bolts and nuts before tightening, or they will loosen.

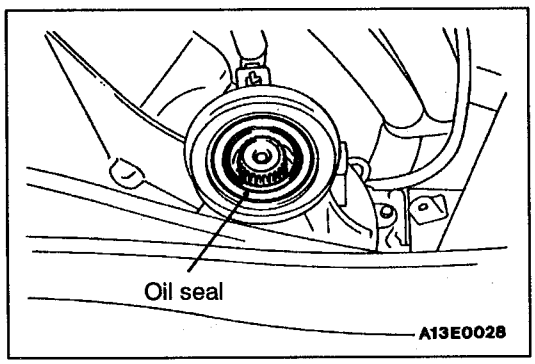

2. Do not damage the oil seal lips of the transmission and transfer.

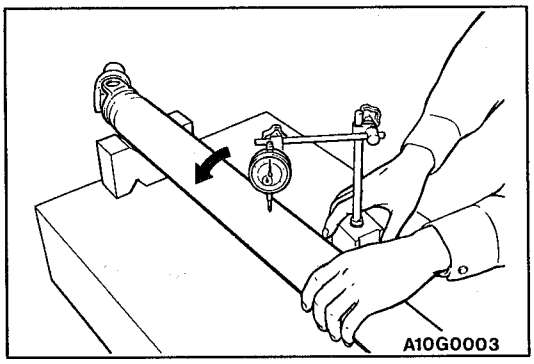

INSPECTION

PROPELLER SHAFT RUNOUT

Limit:

Front propeller shaft: 0.5 mm
Rear propeller shaft: 0.4 mm

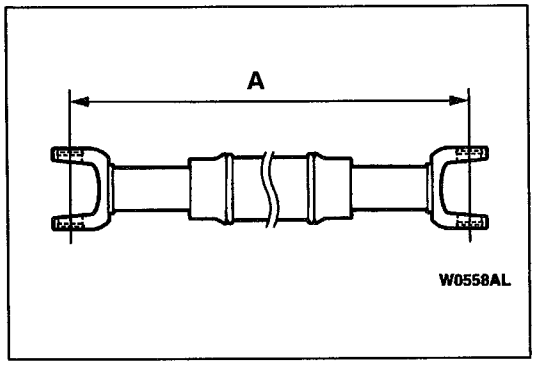

REAR PROPELLER SHAFT

1. Measure length A.

   Standard value:

   630 ± 1.5 mm <3-door models for Hong Kong>
   645.5 ± 1.5 mm <3-door models>
   803 ± 1.5 mm <5-door models>

2. If the standard value is not met, replace the rear propeller shaft.

DISASSEMBLY AND REASSEMBLY

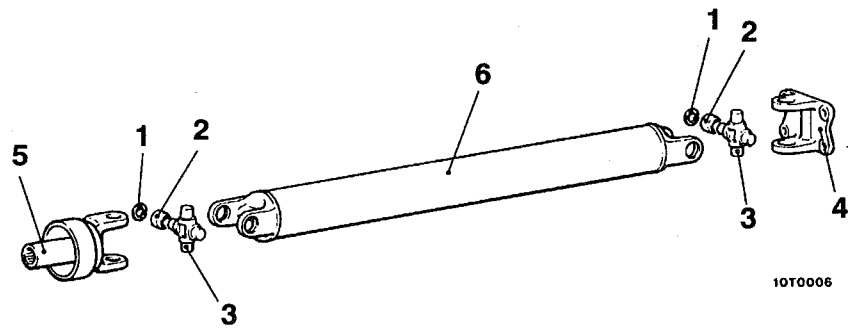

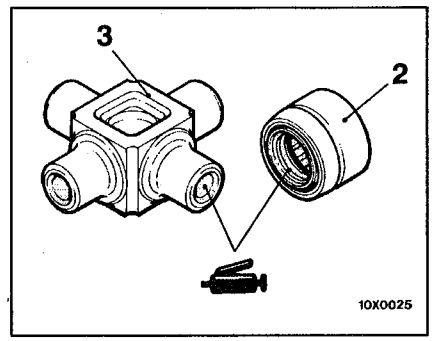

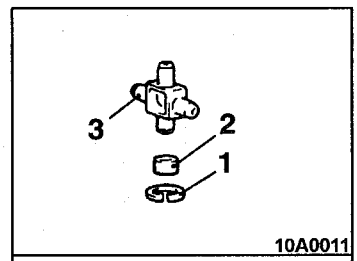

Universal joint repair kit

00008827

Disassembly steps

◀A▶ ▶B◀ 1. Snap ring
◀B▶ ▶A◀ 2. Journal bearing
3. Journal
4. Flange yoke
5. Sleeve yoke
6. Propeller shaft

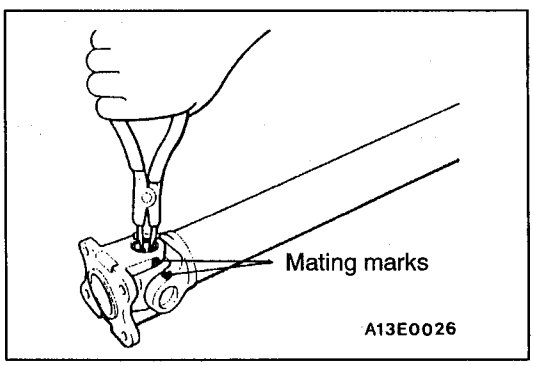

DISASSEMBLY SERVICE POINTS

◀A▶ SNAP RING REMOVAL

Make mating marks on the flange yoke, sleeve yoke and propeller shaft. Then, remove the snap rings.

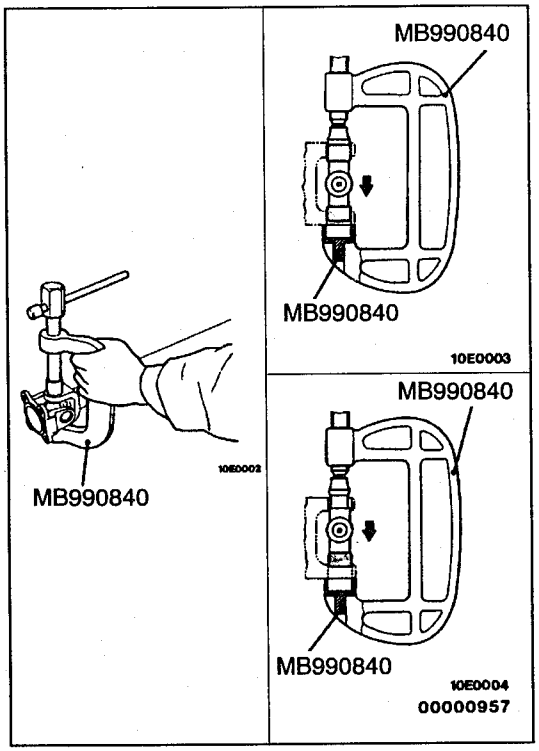

◀B▶ JOURNAL BEARING REMOVAL

1. Using the special tools, press in the journal bearing to remove the journal bearing on the opposite side.
2. Set the special tools reverse to press in the journal. Then, pull out the journal bearing pressed in step 1.

Caution
Do not tap the journal bearing to remove. Tapping the journal bearing will upset the balance of the propeller shaft.

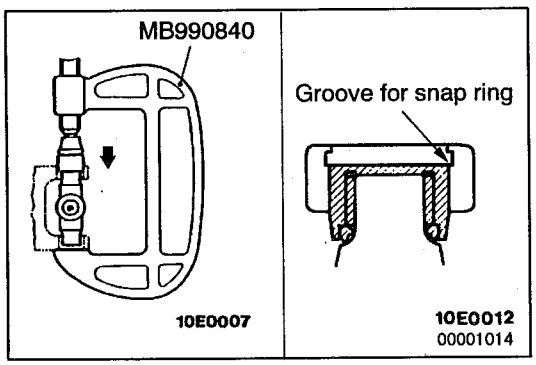

REASSEMBLY SERVICE POINTS

▶A◀ JOURNAL BEARING INSTALLATION

1. Using the special tool, press in the journal bearing to the yoke until the snap ring groove can be seen completely.

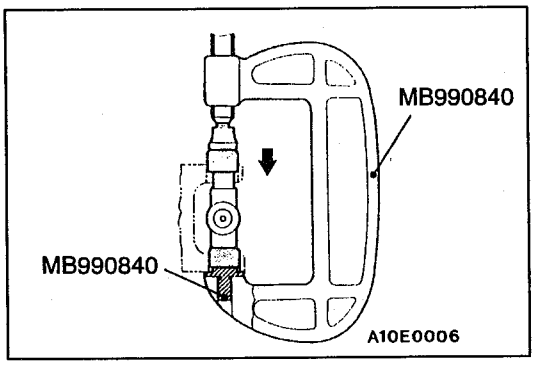

2. Using the special tools, press in the journal bearing on the opposite side to the yoke.

Caution
Press in the journal bearing straight, or the journal could damage the inside of the journal bearing.

3. Align the mating marks on the yoke and propeller shaft. On the propeller shaft side, install the journal bearing in the same steps of 1 and 2.

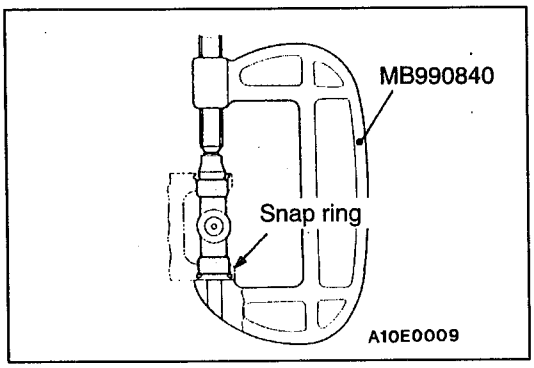

▶B◀ SNAP RING INSTALLATION

1. Install the snap ring to one side of the journal.
2. Using the special tool, press in the journal bearing toward the snap ring from the opposite side which the snap ring has been installed on.

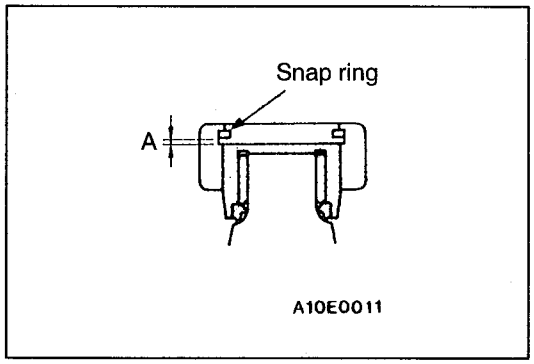

3. Install the snap ring on the opposite side and measure the clearance of the snap ring groove with a thickness gauge.

Standard value:
Front propeller shaft (A) 0 – 0.06 mm
Rear propeller shaft (A) 0.02 – 0.06 mm

Caution
Always use snap rings of the same thickness on both sides.

4. If the standard value(s) are not met, use other snap rings to adjust the clearance.

Items	Thickness mm	Identification colour
Front propeller shaft, Rear propeller shaft	1.28	–
	1.31	Yellow
	1.34	Blue
	1.37	Purple
Rear propeller shaft	1.40	Brown

NOTES